# First Results from Start-up at Pilot Plant Niederaussem

Dr. Peter Moser (RWE), Sandra Schmidt (RWE),
Hugo Garcia (BASF), Dr. Georg Sieder (BASF),
Christine Förster (Linde-KCA), Torsten Stoffregen (Linde-KCA)

12th Meeting of the International Post-Combustion $CO_2$ Capture Network
29th September - 1st October 2009, Regina, Canada

sand.schmidt@rwe.com, torsten.stoffregen@linde-kca.com

# Cooperation BASF - Linde - RWE Power

**The interdisciplinary approach – key to success:**

> BASF – ”The Chemical Company“: development of new solvents and optimized process design

> Linde – “Engineering company”: engineering and construction of the pilot plant, system optimization, scale up

> RWE Power – “Power producer and utility”: plant integration, interface optimization, operation

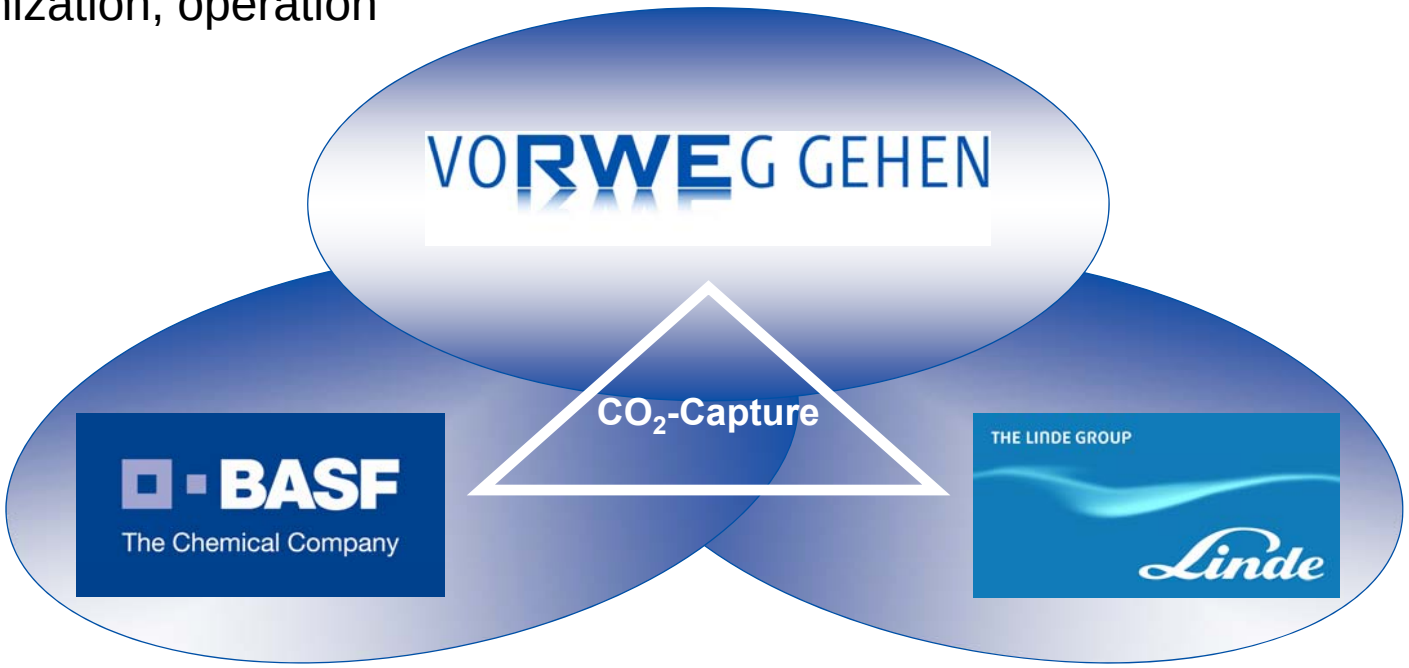

# Cooperation Roadmap

## Development of a highly efficient amine based PCC process

### Solvent Development BASF

- Screening
- Miniplant performance tests

### $CO_2$ Capture Pilot Plant

- Engineering, Procurement
- Construction
- Operation

### Working Group "PCC-Demo"

- Optimization of the PCC concept
- Scale up for a full-scale plant
- Designing of the demo plant

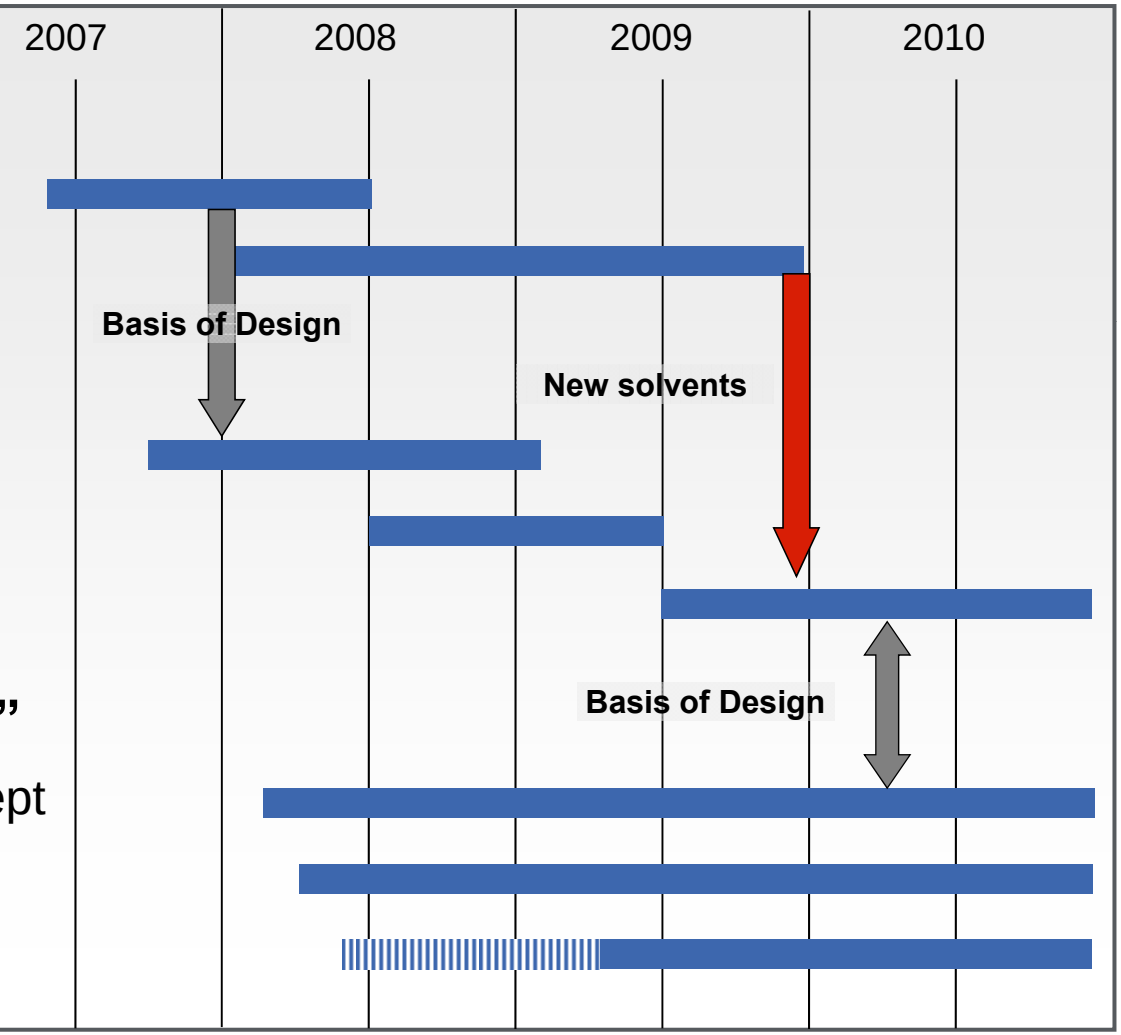

# RWE Coal Innovation Centre - PCC and REAplus

**PCC pilot plant**

**REAplus (High performance FGD)**

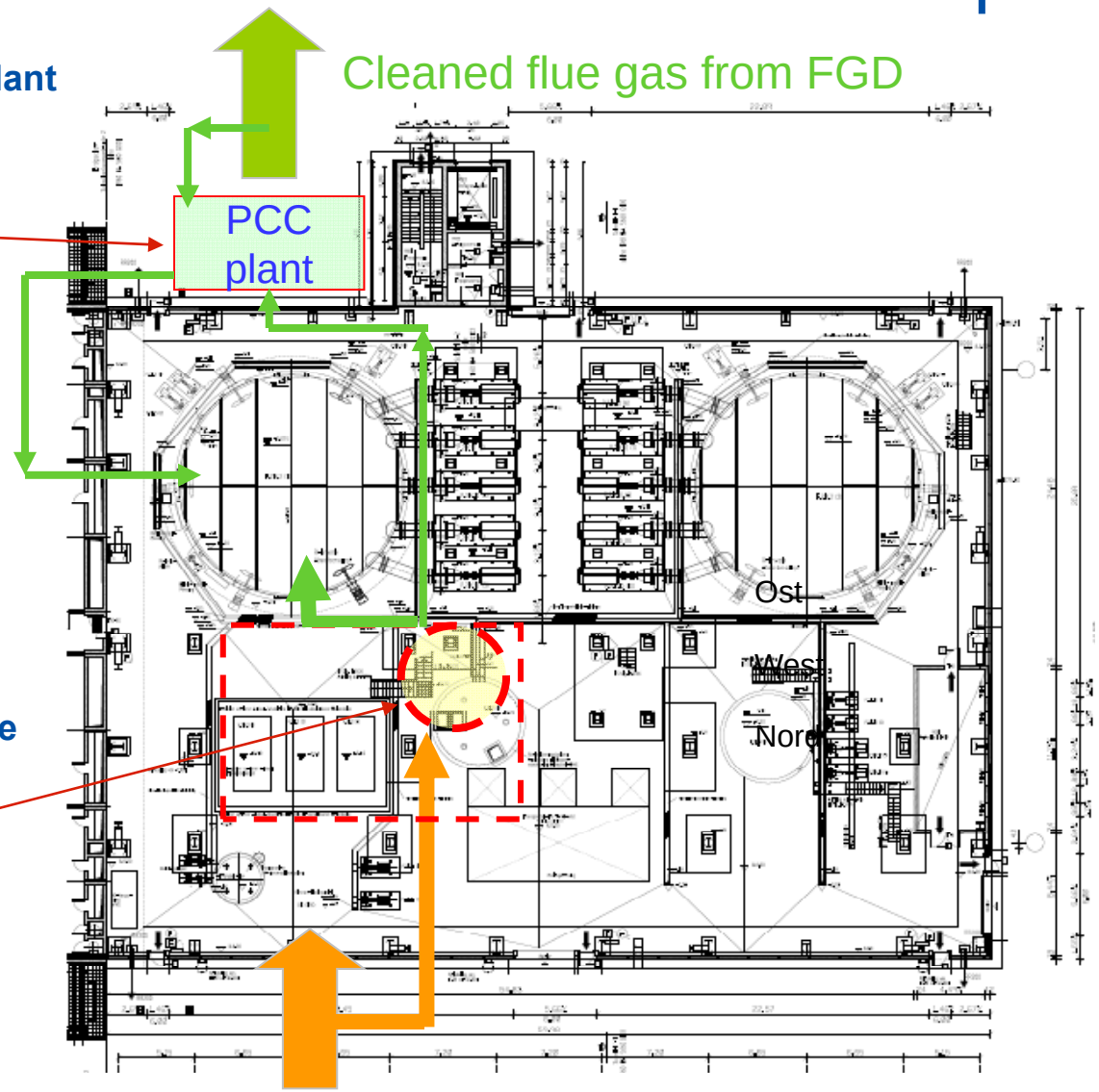

# PCC Pilot Plant Niederaussem/Germany

- Flue gas capacity: 1552 $Nm^3/h$
- $CO_2$-capture rate 90 %
- App. 300 kg $CO_2/h$

- Height: app. 40 m
- Area: app. 15 m x 20 m
- Design: 6 skids, 2 container
- Instrumentation: 240 measurements
- MOC testing: 15 different locations

- Budget RWE Power: 9 Mio. €
- 40% funding by BMWi

- Start-up: July 2009

# Time Schedule - Pilot Plant Niederaussem

| Activity | 2007 III | 2007 IV | 2008 I | 2008 II | 2008 III | 2008 IV | 2009 I | 2009 II | 2009 III | 2009 IV |
|---|---|---|---|---|---|---|---|---|---|---|
| ▪ Engineering & Procurement | | | | | | | | | | |
| ▪ Skid Assembling | | | | | | | | | | |
| ▪ Heavy Lifting - Skids | | | | | | | | | | |
| ▪ Mechanical Completion | | | | | | | | | | |
| ▪ “Cold” Start-up | | | | | | | | | | |
| ▪ “Hot” Start-up | | | | | | | | | | |
| ▪ Operation | | | | | | | | | | |

First $CO_2$-capture from flue gas of a conventional power plant in Germany

# PCC Pilot Plant Niederaussem - Construction

## Erection of Skid 1 and Skid 2 in March 2009

Skid 1 – app. 80 t, 41 m
05.03.09

Skid 2 – app. 50 t, 25 m
06.03.09

# Basic Process of the PCC Pilot Plant

**Flue gas cooling, $SO_2$-pre scrubbing**

**$CO_2$-capture**

**Solvent regeneration**

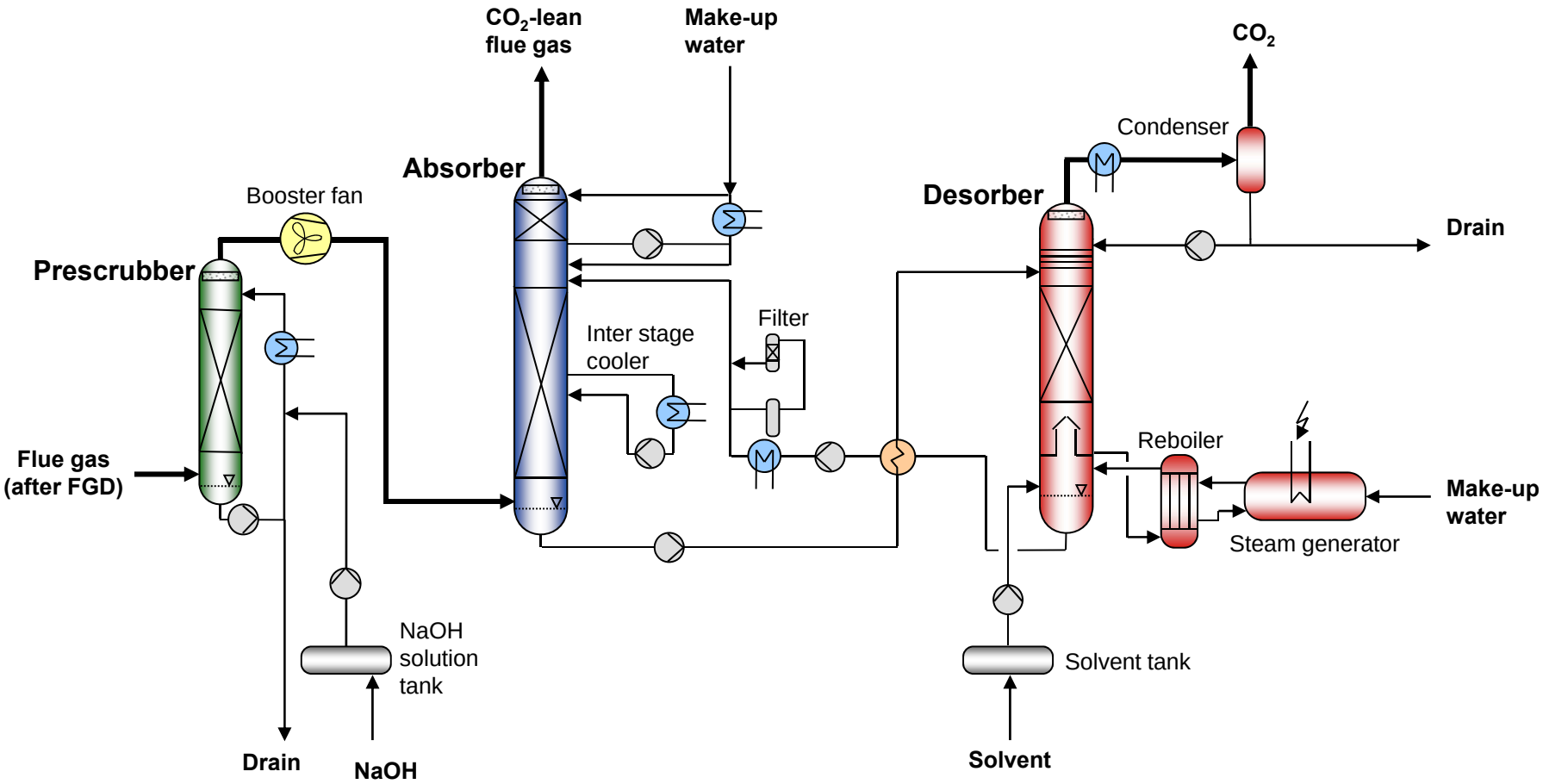

# Measurement Equipment of the PCC Pilot Plant

**Flue gas cooling, $SO_2$-pre scrubbing** | **$CO_2$-capture** | **Solvent regeneration**

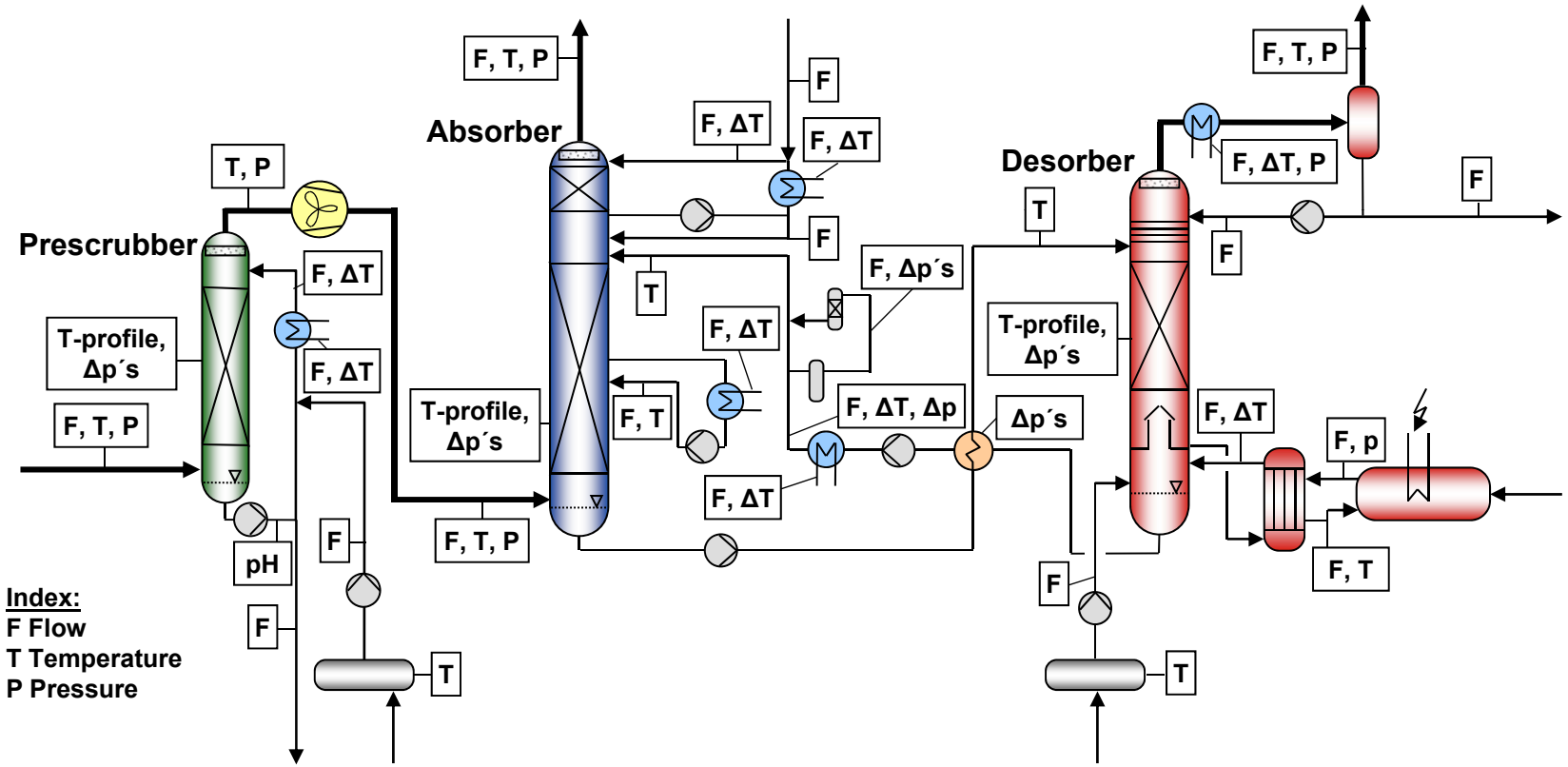

# Measurement Equipment of the PCC Pilot Plant

**Flue gas cooling, $SO_2$-pre scrubbing** | **$CO_2$-capture** | **Solvent regeneration**

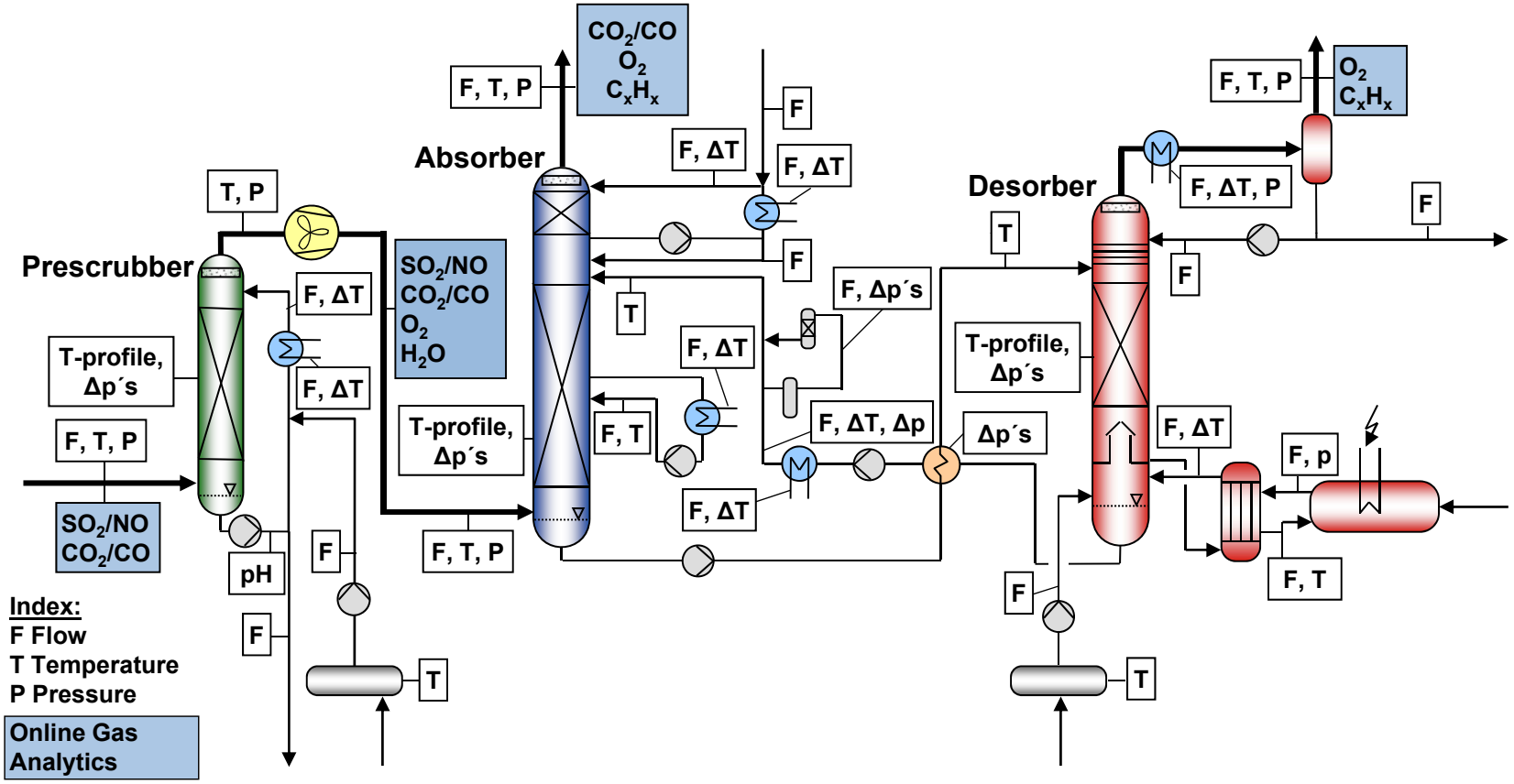

# Measurement Equipment of the PCC Pilot Plant

**Flue gas cooling, $SO_2$-pre scrubbing** | **$CO_2$-capture** | **Solvent regeneration**

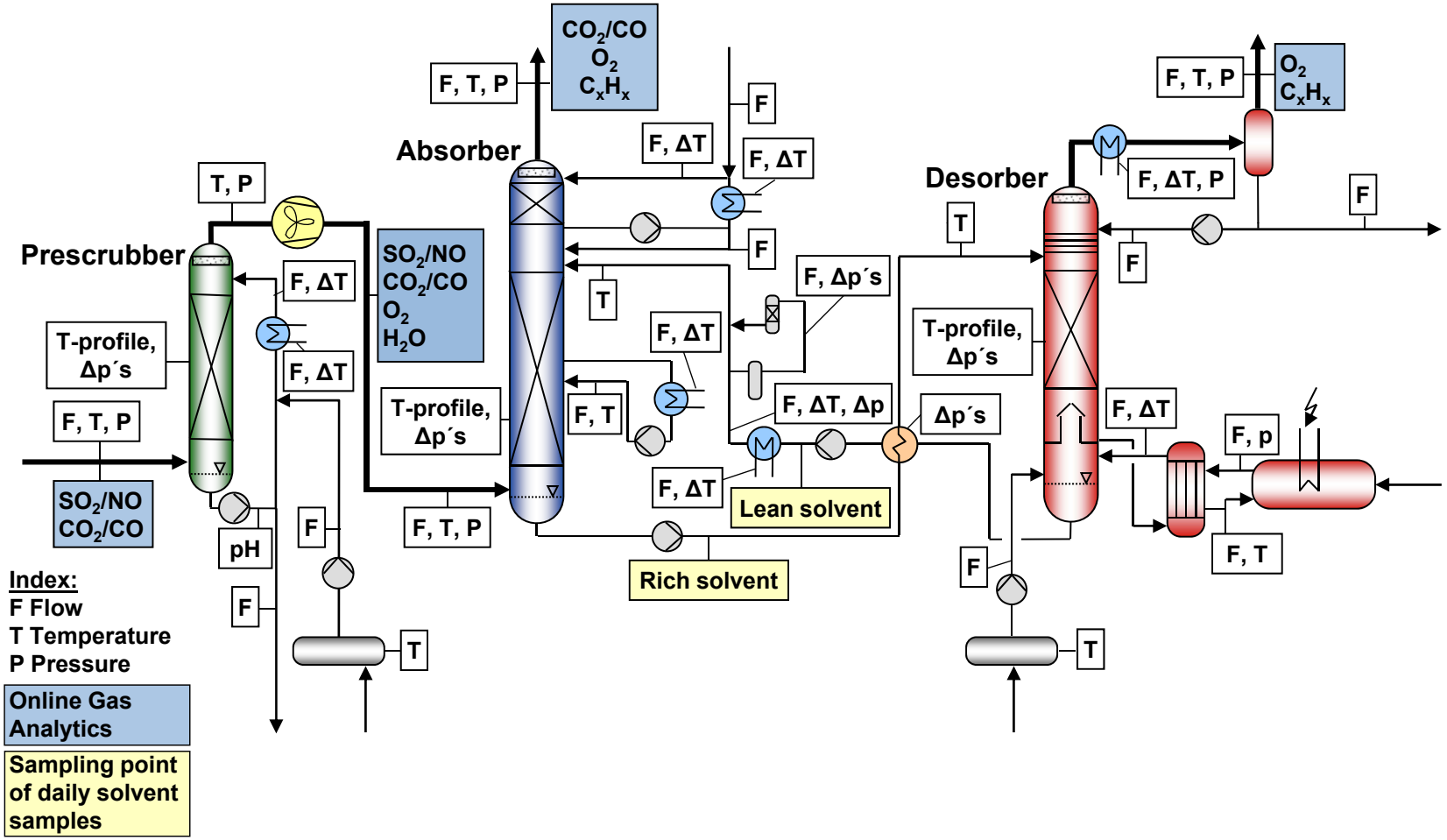


**Index:**
F Flow
T Temperature
P Pressure

Online Gas Analytics

Sampling point of daily solvent samples

# Testing Programme Pilot Plant Niederaussem

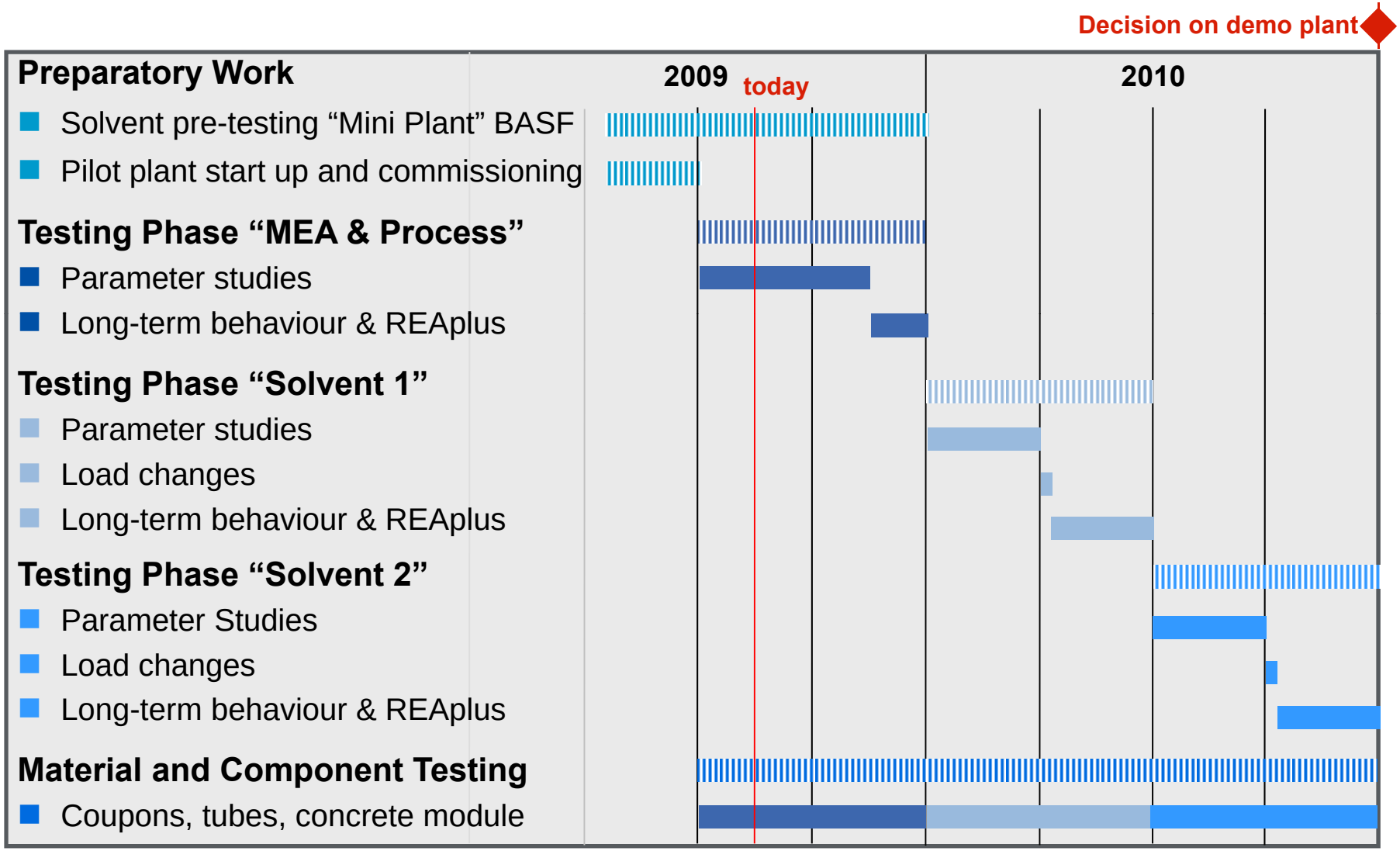

# Parameter Study – Variation of Desorber Pressure

## Capture rate and specific energy demand for MEA

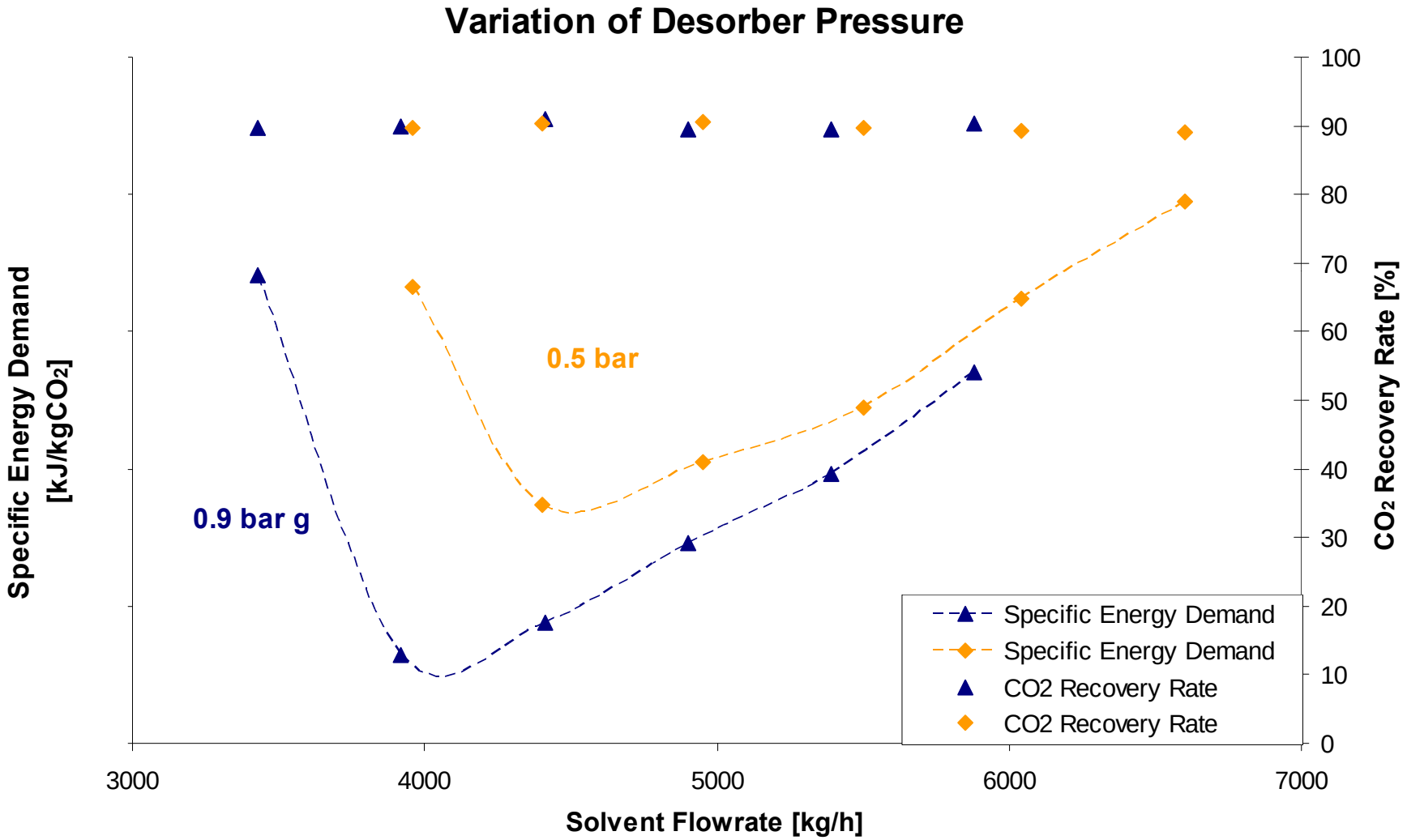

# Comparision of Tests and Simulation

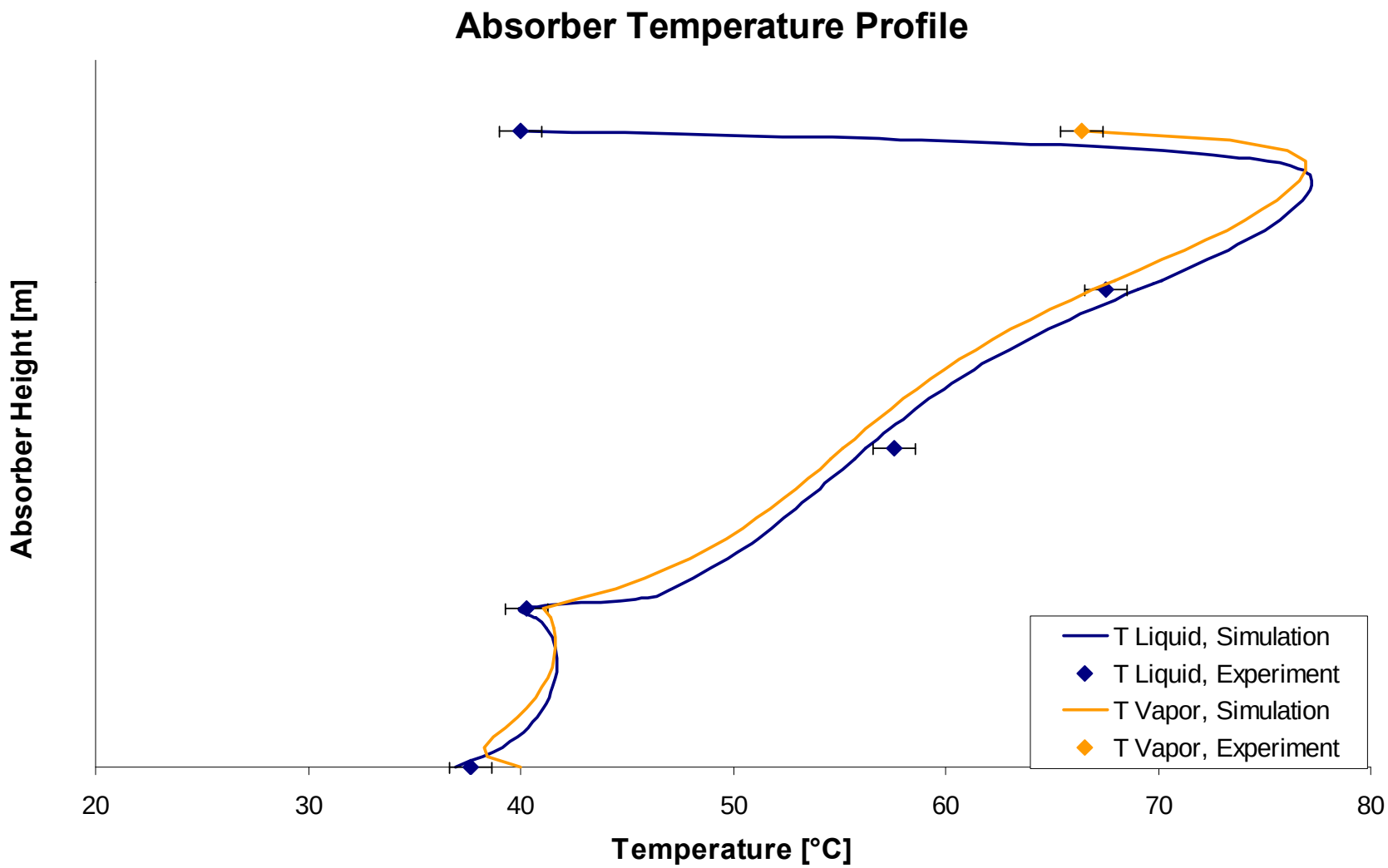

# Parameter Study – Variation of Flow Rate
# Process optimisation

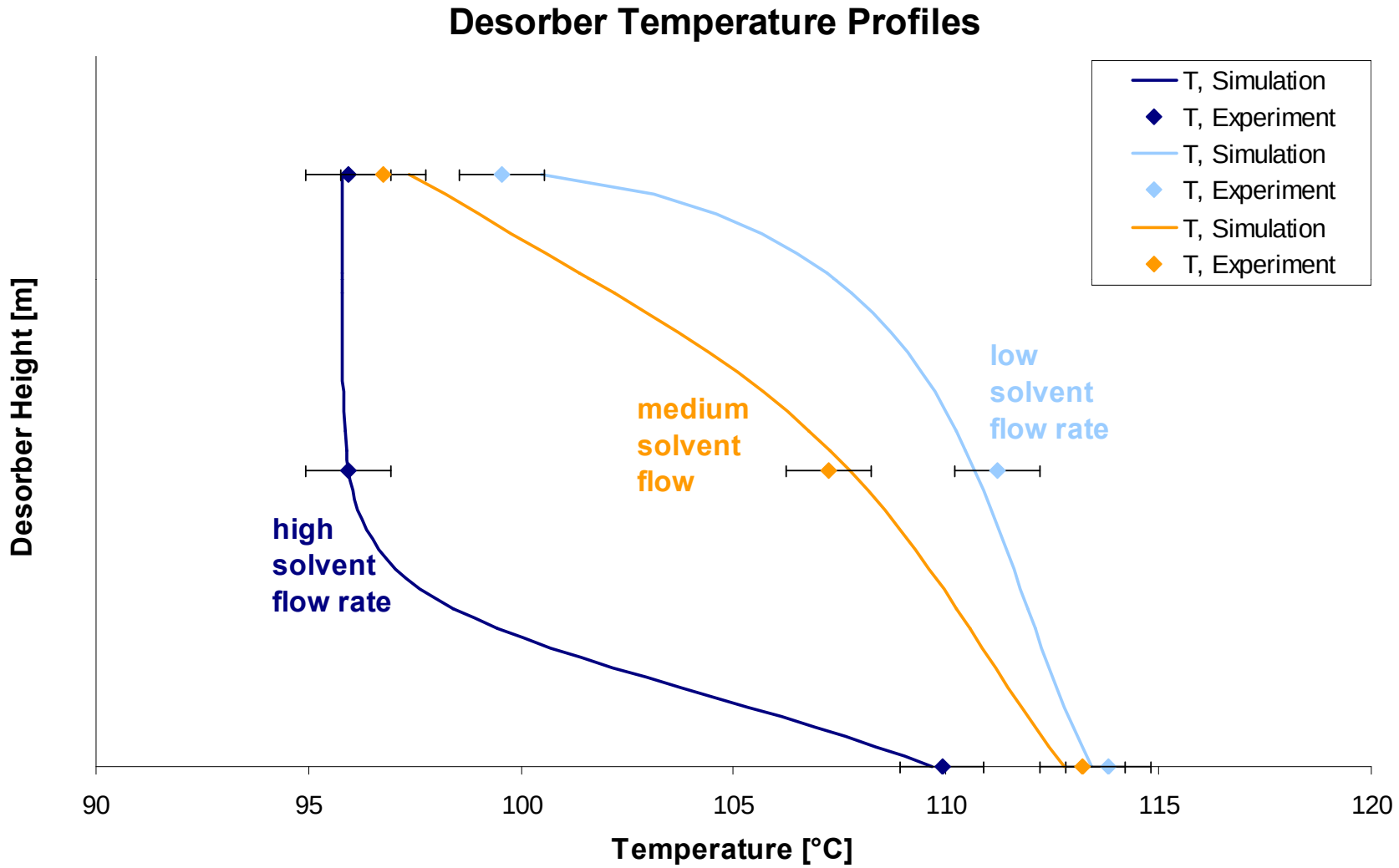

# Conclusion and Next Steps

**Conclusion:**

- Successful start-up of the Pilot Plant in Niederaussem, Germany
- In operation since June 2009
- Start of the testing programme with the solvent MEA in July with parameter studies to confirm the process performance and to validate the simulation tool
- First results show a good performance of the plant
- Stable and smooth operability of the plant guarantees positive testing-measurements

Testing of the optimized process, new developed $CO_2$-solvents and equipment materials in the pilot plant in Niederaussem until end of 2010

**Next steps:**

- Technical and economic evaluation of the new amine process
- Results of the pilot plant will be used for the engineering of the demonstration plant

# Thank you very much for your attention

RWE
The energy to lead

BASF
The Chemical Company

THE LINDE GROUP
Linde